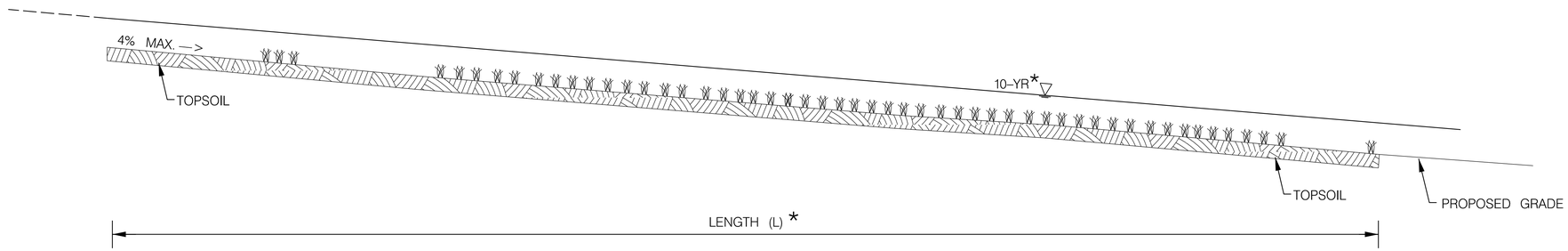

GRASS SWALE PROFILE

NOT TO SCALE

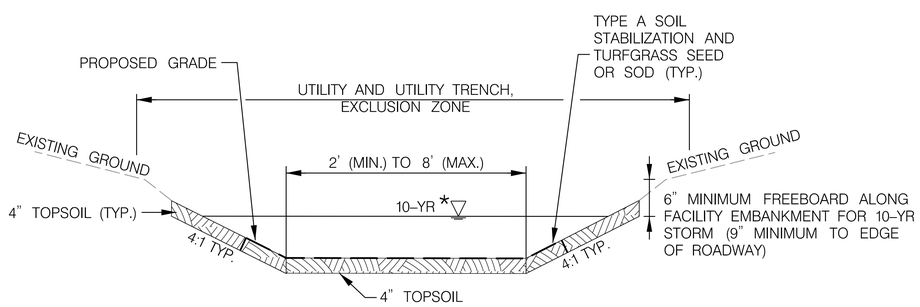

GRASS SWALE TYPICAL SECTION

NOT TO SCALE

DESIGNER NOTES:

1. REFER TO SECTION 316 OF THE MDOT SHA STANDARD SPECIFICATIONS FOR CONSTRUCTION AND MATERIALS FOR MORE INFORMATION.
2. INCLUDE SWMFAC NUMBER ON SWM SHEETS.
3. USE EITHER SALVAGED OR FURNISHED TOPSOIL BASED ON THE AMOUNT OF EXISTING TOPSOIL WITHIN PROJECT LIMITS.
4. MUST ALSO BE DESIGNED TO CONVEY 10–YR FLOW AT NON–EROSIVE VELOCITIES.
5. BOTTOM WIDTH: 2'–8'
6. UTILITY (INCLUDING GUY–WIRES) AND UTILITY TRENCH EXCLUSION ZONE EXTENDS A MINIMUM OF 10 FEET FROM THE BOTTOM OF MEDIA. 10 FEET FROM TOP OF EMBANKMENT IS PREFERABLE.
7. SEE LANDSCAPE PLANS FOR PLANTINGS.

* DETERMINE BY DESIGN

MARYLAND DEPARTMENT OF TRANSPORTATION
STATE HIGHWAY ADMINISTRATION

DESIGN GUIDANCE DRAWING

GRASS SWALE

REVISION DATE: JUNE 1, 2022

*** NOTE: THIS DRAWING IS ONLY TO BE USED AS A DESIGN GUIDE AND IS NOT A SUBSTITUTE FOR PROJECT-SPECIFIC PROFILES AND SECTIONS IN CONTRACT DOCUMENTS***